PART NO.	NAME	QTY.	DESCRIPTION OR DRAWING NUMBER
1	ELCO EP40	1	ASSEMBLY OF PARTS 2 Thru 4.
2	BALDOR Duty Master AC Motor	1	Baldor Frame #FL2162Z
3	ELCO Medium Housing	1	ELCO #93293
4	ELCO Medium & Large Cover	1	ELCO #944494

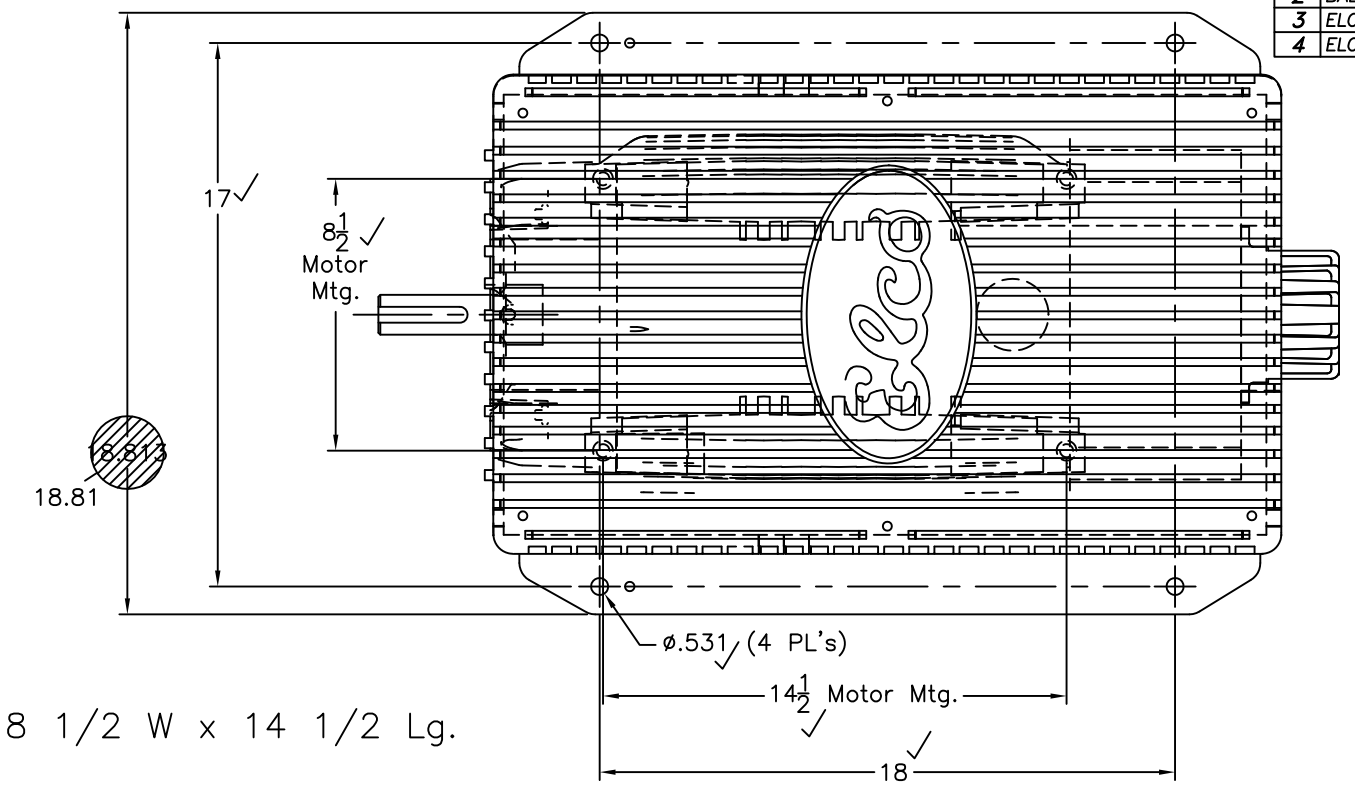

Motor Mtg. – 8 1/2 W x 14 1/2 Lg.

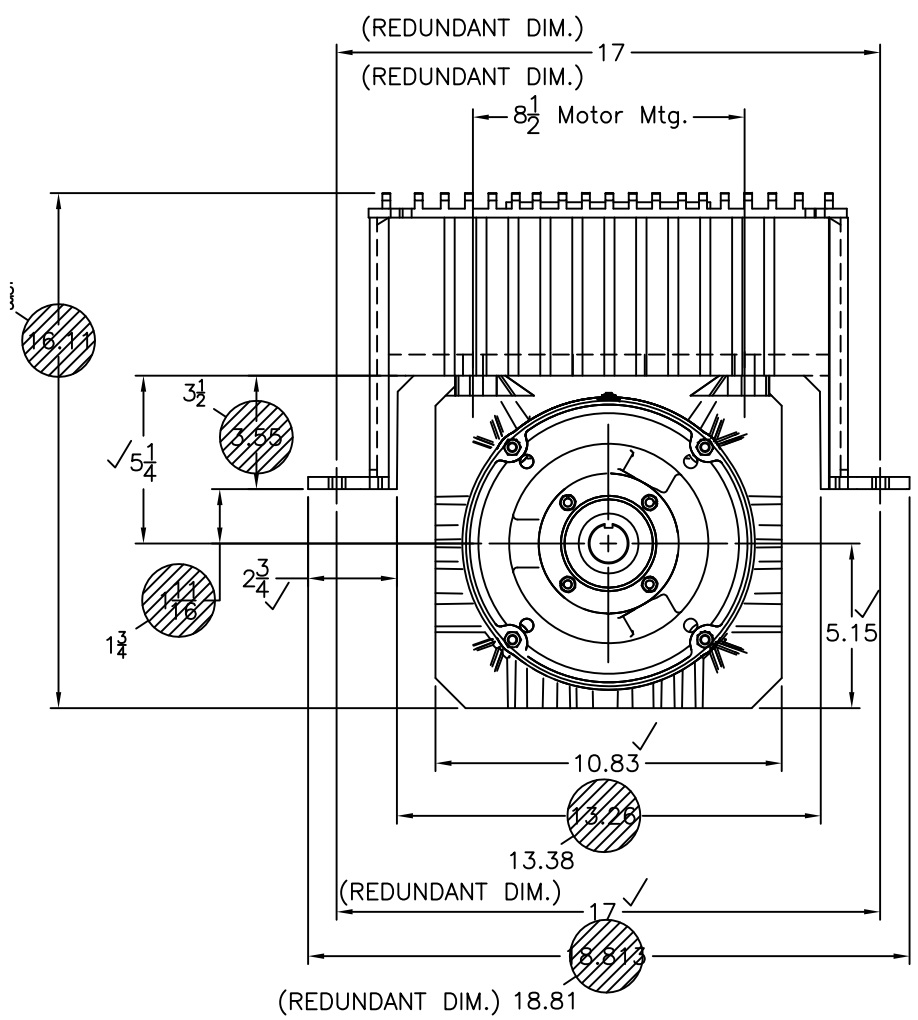

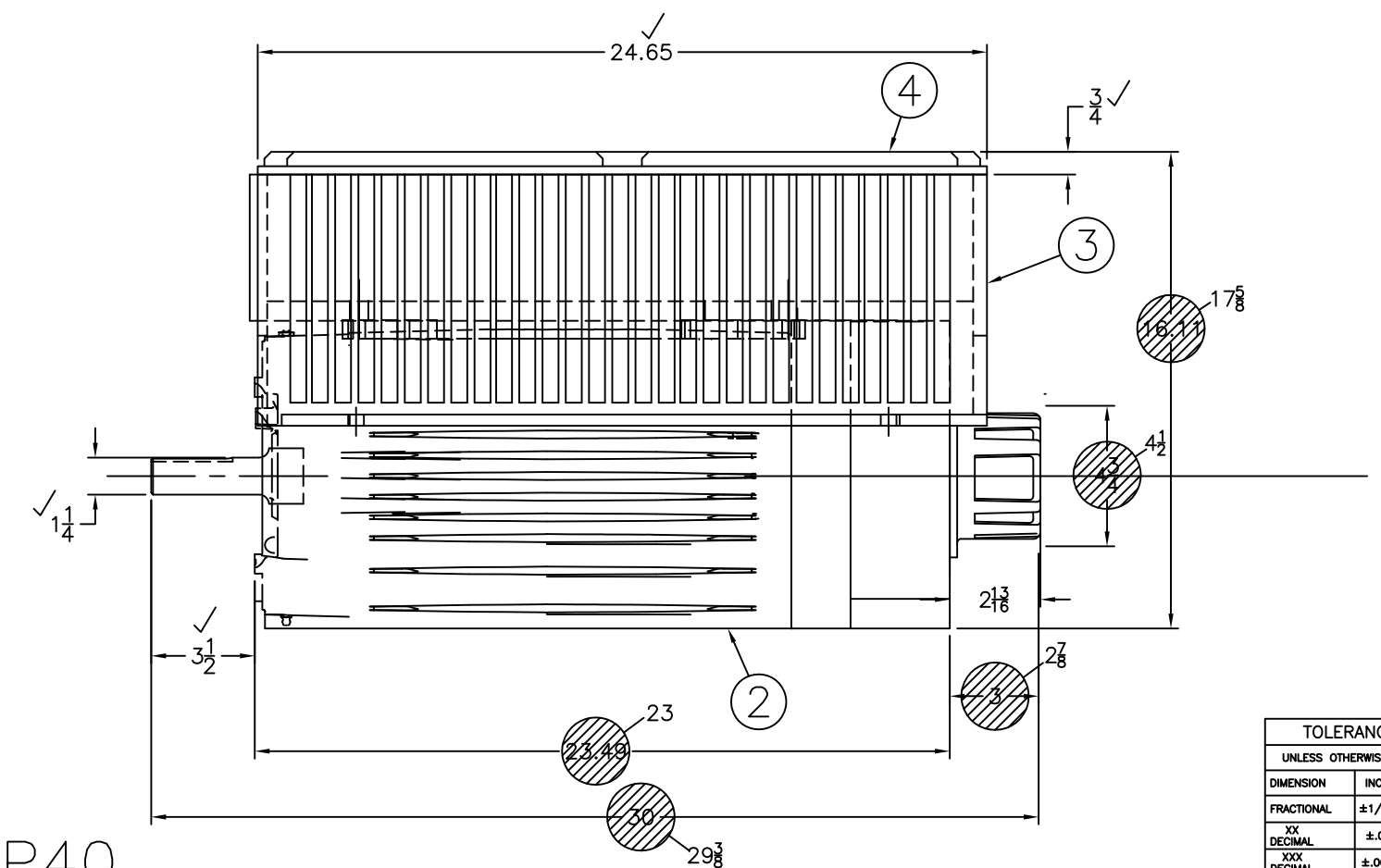

EP40

Weight 400 Lbs.

REV LTR	DESCRIPTION	BY	DATE
.		.	.

TOLERANCES			DRAWN BY -CBM-	DATE 4/8/14
UNLESS OTHERWISE NOTED			CHECKED BY	DATE
DIMENSION	INCH	MM	APP'D BY	DATE
FRACTIONAL	±1/64	±0,4	SCALE:	
XX DECIMAL	±.01	±0,25	NEXT ASM. DRAWING	
XXX DECIMAL	±.005	±0,13	PROPRIETARY INFORMATION	
ANGULAR	±0°–30'	—		
BREAK ALL SHARP EDGES				
METRIC DIMENSIONING				
INCH / MM				

ELCO Motor Yachts

TITLE
EP40
.
ELCO BOAT

DRAWING NUMBER
EP40
SH 1 OF 1

REV .

DRAWING NUMBER EP40 SH 1 OF 1 REV .